PMD-W-SK-97-TP

DATE	CHANGES	INTL	REV
09.08.10	Original	JMW	1.0
12.08.10	Corrected Part Number from PDM to PMD	JMW	1.1
01.05.11	Updated Temp Spec	JMW	1.2
01.24.11	Improved PDF/Print resolution	TWH	1.3
01.24.11	Added drawer extension to side view	TWH	1.4
07.19.13	Added installation guide	TWH	1.5

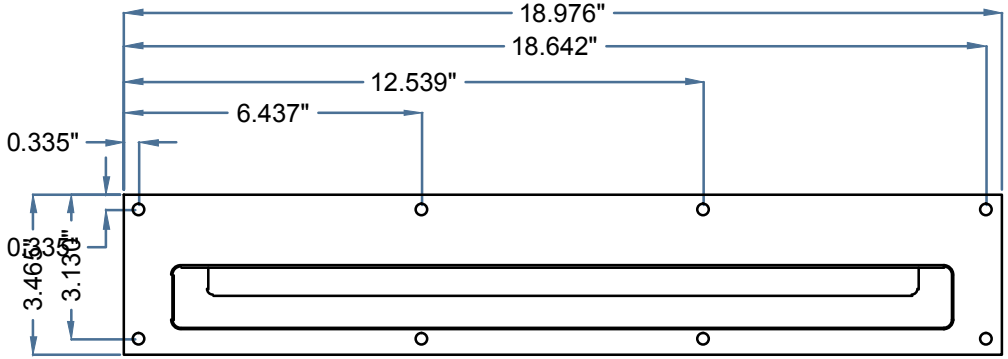

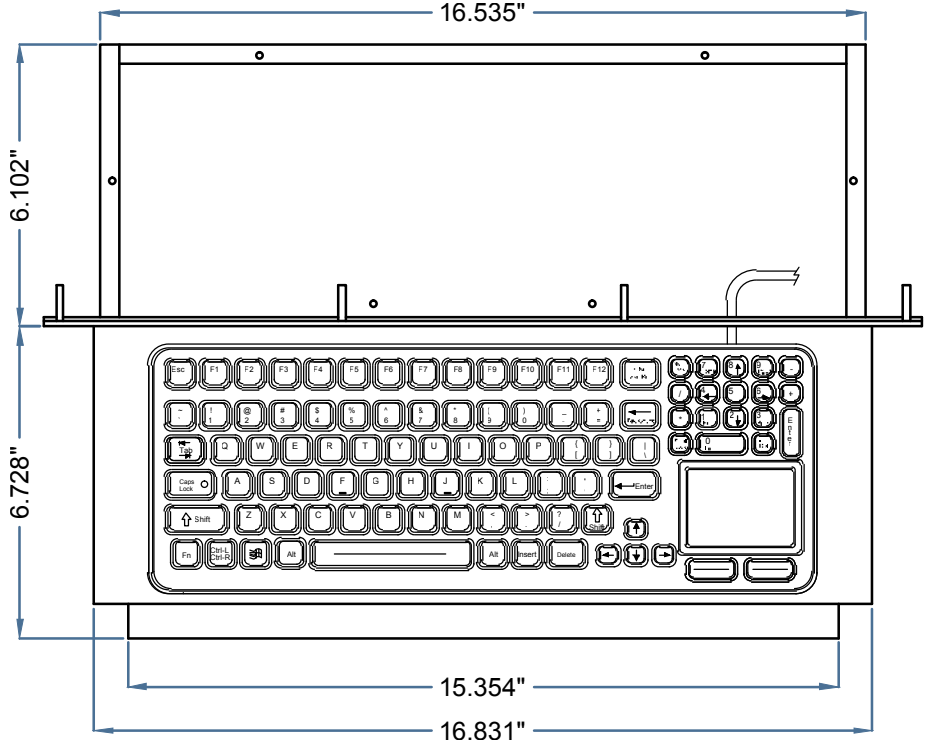

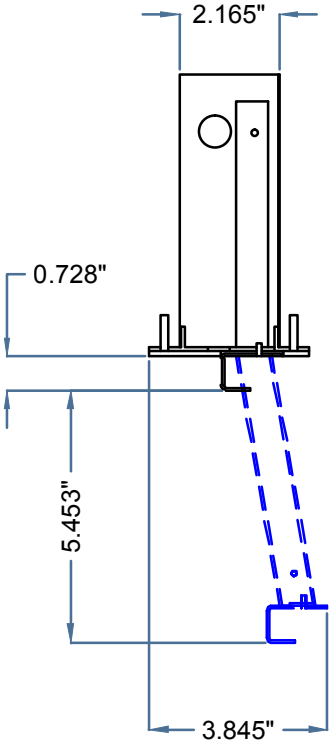

iKey, Ltd.
2621 Ridgpoint Dr. Suite 235
Austin, Texas 78754
Voice: (512) 837-0283
Fax: (512) 927-8530

©2013 iKey,Ltd.

Part Number: PMD-W-SK-97-TP	Drawing Number: MKT0247	Sheet: 1 OF 2	
Drawing Title: PMD-W-SK-97-TP-MKT	Revision: 1.5	Date: 07.19.13	TWH

PMD-W-SK-97-TP

KEY SWITCH

MATERIAL:
LIFE: Greater Than 10 Million Cycles
TRAVEL: 0.55 in.
ACTUATION FORCE: 7.05 oz. +/- 1.06 oz. (200g +/- 30g)
FEEDBACK: Tactile with Mechanical Snap

POWER

PS2: KEYBOARD: 50mA@5V (from Keyboard port)
TOUCH PAD: 10mA@5V (from Mouse port)
USB: 60mA@5V (from CPU port)

TEMPERATURE RANGE

STORAGE: -40°F to +194°F (-40°C to +90°C)
OPERATING: -40°F to +158°F (-40°C to +70°C)

HUMIDITY

100% Humidity Resistant

VIBRATION

POWER SPECTRAL DENSITY: .04g/HZ
FREQUENCY RANGE: 20Hz-2Khz
DURATION OF TEST PER AXIS: 3 hours

SHOCK

3 X 11 ms pulses of 50g on each of 3 axes

WEIGHT

10.00 lbs +/- 0.10 lbs (4.53 kg +/- 0.05 kg)

INSTALLATION GUIDE

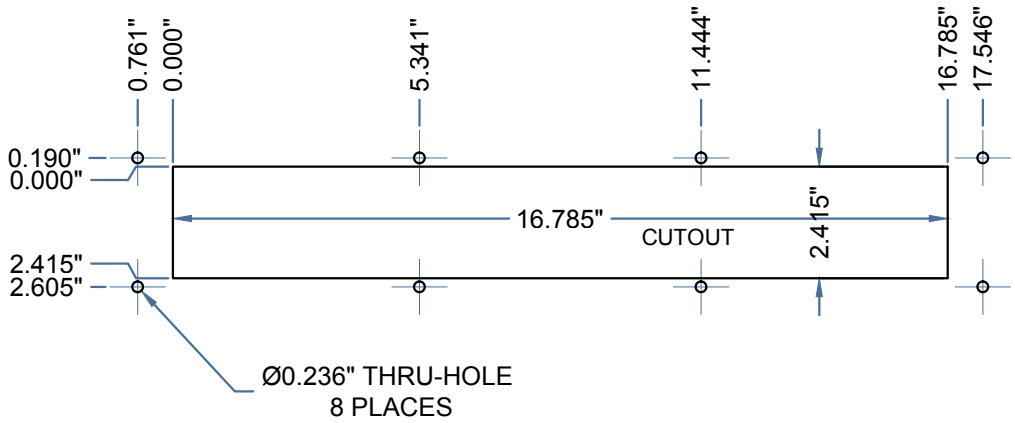

iKey
iKey, Ltd.
2621 Ridgpoint Dr. Suite 235
Austin, Texas 78754
Voice: (512) 837-0283
Fax: (512) 927-8530
©2013 iKey,Ltd.

Part Number: PMD-W-SK-97-TP	Drawing Number: MKT0247	Sheet: 2 OF 2	
Drawing Title: PMD-W-SK-97-TP-MKT	Revision: 1.5	Date: 07.19.13	TWH